Yash Chitalia

801 Atlantic Dr, Room 021
Atlanta, GA 30332, USA

Email : ychitalia3@gatech.edu
Phone : +1-734-757-0489
Website : yashchitalia.github.io
Google Scholar Profile

Education

Georgia Institute of Technology, Atlanta, GA — Expected 08/2021
Ph.D. in Robotics, Major: Mechanical Engineering — **GPA: 3.91/4.00**
Thesis Title: Design, Modeling & Control of Micro-scale & Meso-scale Tendon-Driven Surgical Robots
Advisor: Jaydev P. Desai

University of Michigan, Ann Arbor, MI — 05/2013
M.S. in Electrical Engineering, Major: Control Systems — **GPA: 3.81/4.00**
Advisors: Anouck Girard & Ilya Kolmanovsky

University of Mumbai, Maharashtra, India — 08/2011
B.E. in Electronics Engineering — **GPA: 3.86/4.00**

Research Experience

Medical Robotics and Automation (RoboMed) Laboratory — 08/2016 - present
Graduate Research Assistant, Georgia Institute of Technology

- **Robotic Guidewires:** Developed two tendon-driven robotic guidewires to treat cardiovascular diseases, both guidewires, among the smallest continuum robots in the world. Designed a 0.78 mm outer diameter guidewire with two orthogonal degrees-of-freedom allowing 3D-motion capabilities. Miniaturized this design to a 0.4 mm outer diameter guidewire with follow-the-leader motion capabilities. Developed a handheld controller & motion stage for the guidewire, allowing it to be inserted, retracted and rolled, mimicking surgeon actions. Robot revisions were guided by collaborations with interventional radiologist from Emory University.
- **Robotic Neuroendoscope:** Developed a two degree-of-freedom robotic neuroendoscopy tool to treat pediatric hydrocephalus. Designed the tool by femtosecond laser micromachining a nitinol tube of 1.93 mm outer diameter, to form two tendon-driven joints. Designed a handheld controller, that allows manipulation of the distal tool tip with a joystick, along with insertion/retraction and rolling motion. Controller revisions were guided and tested by neurosurgeon collaborator from Children's Healthcare of Atlanta.
- **FBG Bending Sensor:** Developed a miniature large-deflection bending sensor based on fiber Bragg grating (FBG) for micro-scale guidewire and neuroendoscope joints. Novel sensor assembly uses FBG fiber bonded to nitinol micromachined tube, allowing measurement of curvatures of 145 m^{-1}, which is over 2x maximum reported curvatures in previous literature. Developed a Preisach hysteresis model and unscented Kalman filter based observer for accurate shape sensing.
- **Miniature Force Sensor:** Worked on the design of a dual-photointerrupter based low-cost, high-linearity, miniature tendon-force sensor for my tendon-driven robots. Incorporated the force sensor for the guidewire and neuroendoscope robot controllers for force-based control.

Healthcare Robotics Laboratory — 08/2014 - 07/2016
Graduate Research Assistant, Georgia Institute of Technology

- **Autobed Robot:** Modified a standard hospital bed to be controllable via a web-interface, to be deployed in the home of Mr. Henry Evans, a quadriplegic person. Added encoders, pressure sensors to the bed for closed-loop control of the bed's degrees-of-freedom, and to sense the pressure distribution of the person sleeping on the bed. Conducted human subject trials to collect pressure distribution data. This data was used by machine learning algorithms to estimate occupant pose even if they are covered by a blanket. Wrote a controller for the bed in ROS to allow the bed to communicate and collaborate with a PR2 robot to help Mr. Evans perform tasks of daily living independently.

Vehicle Optimization, Dynamics, Control and Autonomy Lab — 05/2012 - 05/2013
Graduate Student Member and Research Assistant, University of Michigan-Ann Arbor

- **Prioritized Reference Governors:** Designed two methods to prioritize constraints for reference and command governors, which are add-on schemes to ensure constraint enforcement for discrete-time closed-loop linear systems. Demonstrated the system's efficacy for a constrained spring-mass-damper problem and an F-16 aircraft with actuator constraints.
- **Classification Scheme for UAVs:** Developed a three-tiered classification scheme for UAVs inspecting objects of interest, especially when a single UAV operator is in charge of manning multiple UAVs in a hostile environment. The first two tiers of the scheme are machine-driven trichotomous classifiers, that decide whether a revisit to a unknown territory is warranted, followed by a workload-dependent human dichotomous classifier that decides whether unknown objects in the environment are hostile or friendly.

Publications

Journal Articles

1. **Y. Chitalia**, S. Jeong (co-first author), K. K. Yamamoto, J. J. Chern, and J.P. Desai, "Modeling and Control of a Meso-scale Multi-Joint Continuum Robot for Pediatric Neurosurgery," in *IEEE Transactions on Robotics*, doi: 10.1109/TRO.2020.3031270 (Link).
2. S. Jeong, **Y. Chitalia (co-first author)**, and J.P. Desai, "Design, Modeling, and Control of a Coaxially Aligned Steerable (COAST) Guidewire Robot," in *IEEE Robotics and Automation Letters*. 10.1109/LRA.2020.3004782 (Link).
3. S. Jeong, **Y. Chitalia** and J. P. Desai, "Miniature Force Sensor based on Dual-photointerrupter with High Linearity and Disturbance Compensation," in *IEEE Sensors Journal* (Link).
4. **Y. Chitalia**, N. J. Deaton, S. Jeong, N. Rahman and J. P. Desai, "Towards FBG-Based Shape Sensing for Micro-Scale and Meso-Scale Continuum Robots With Large Deflection," in *IEEE Robotics and Automation Letters*, vol. 5, no. 2, pp. 1712-1719, April 2020 (Link).
5. **Y. C. Chitalia**, S. Jeong, N. Deaton, J. J. Chern and J. P. Desai, "Design and Kinematics Analysis of a Robotic Pediatric Neuroendoscope Tool Body," in *IEEE/ASME Transactions on Mechatronics*, vol. 25, no. 2, pp. 985-995, April 2020, doi: 10.1109/TMECH.2020.2967748 (Link).
6. A.S. Kapusta, P. M. Grice, H. M. Clever, **Y. Chitalia**, D. Park, C.C. Kemp, "A system for bedside assistance that integrates a robotic bed and a mobile manipulator," *PLoS One*, 2019;14(10):e0221854. Published 2019 Oct 16. doi:10.1371/journal.pone.0221854 (Link)

Conference Proceedings

1. N. Deaton, **Y. Chitalia**, and J. P. Desai, "Steerable Stylet for High Dose Rate Brachytherapy," in *International Symposium on Experimental Robotics*, Springer (accepted).
2. A. Sarma, G. C. Collins, N. Nayar, **Y. Chitalia**, S. Jeong, B. D.Lindsey, and J. P. Desai, "Towards the development of an ultrasound-guided robotically steerable guidewire," *2020 International Symposium on Medical Robotics (ISMR), IEEE*, (accepted).
3. **Y. Chitalia**, S. Jeong, J. Bok, V. Nguyen, S. Melkote, J. J. Chern, J. P. Desai, "Towards the Design and Development of a Pediatric Neuroendoscope Tool," *2019 IEEE/RSJ International Conference on Intelligent Robots and Systems (IROS)*, Macau, China, 2019, pp. 2998-3004 (Link).
4. **Y. Chitalia**, X. Wang, V. Nguyen, S. Melkote, J. J. Chern, and J. P. Desai, "Design and Analysis of a Bidirectional Notch Joint for a Robotic Pediatric Neuroendoscope," in *International Symposium on Experimental Robotics*, (pp. 24-33). Springer, Cham., November 2018 (Link)
5. H. M. Clever, A. Kapusta, D. Park, Z. Erickson, **Y. Chitalia** and C. C. Kemp, "3D Human Pose Estimation on a Configurable Bed from a Pressure Image," *2018 IEEE/RSJ International Conference on Intelligent Robots and Systems (IROS)*, Madrid, 2018, pp. 54-61 (Link).
6. **Y. Chitalia**, X. Wang and J. P. Desai, "Design, Modeling and Control of a 2-DoF Robotic Guidewire," *2018 IEEE International Conference on Robotics and Automation (ICRA)*, Brisbane, QLD, 2018, pp. 32-37 (Link).
7. T. Bhattacharjee, J. Wade, **Y. Chitalia** and C. C. Kemp, "Data-driven thermal recognition of contact with people and objects," *2016 IEEE Haptics Symposium (HAPTICS)*, Philadelphia, PA, 2016, pp. 297-304 (Link).
8. **Y. Chitalia**, W. Zhang, B. Hyun and A. Girard, "A revisit-based mixed-initiative nested classification scheme for Unmanned Aerial Vehicles," *2014 American Control Conference*, Portland, OR, 2014, pp. 1793-1798 (Link).
9. U. Kalabić, **Y. Chitalia**, J. Buckland and I. Kolmanovsky, "Prioritization schemes for reference and command governors," *2013 European Control Conference (ECC)*, Zurich, 2013, pp. 2734-2739 (Link).

Patent Applications

- J. P. Desai, **Y. Chitalia**, S. Jeong, "System, Method, And Apparatus For The Control Of Multiple Degrees-Of-Freedom Bending And The Bending Length Of A Coaxially Aligned Robotically Steerable Guidewire," **Provisional patent, 63/013425** , 2020
- J. P. Desai, **Y. Chitalia**, S. Jeong, J. J. Chern, "Steerable and flexible robotic endoscopic tools for minimally invasive procedures," **PCT Patent, PCT/US20/20942, patent pending**, 2020
- J. P. Desai, **Y. Chitalia**, S. Jeong, J. J. Chern, "Multi-port, steerable, and flexible robotic endoscopic tools for minimally invasive procedures," **U.S. Patent Application No. 62/813,444, patent pending**, 2019
- J. P. Desai, **Y. Chitalia** "Systems and Methods for Steering Guidewires," **PCT Patent, PCT/US2018/021784, patent pending**, 2019
- J. P. Desai, **Y. Chitalia** "System, Method, and Apparatus for Active Control of Multiple Degrees-of-Freedom Micro-Scale Guidewires and Devices," **U.S. Patent Application No. 62/469,570, patent pending**, 2017

Teaching Experience

ME 2110: Creative Decisions and Design 07/2016 - 07/2018

Head Teaching Assistant, Instructor: Dr. Thomas Kurfess/ Dr. Christopher Saldana

- Led a team of approximately 15-20 Graduate and Undergraduate teaching assistants in successfully teaching a class of approximately 300 students (per semester). The class involved students building robots competing against each other in a final competition.
- Instructed students on mechanical design and failure mode identification, mechatronics design and machining practices and machine operation.

Petit Undergraduate Research Scholars Program 2015, 2018-19

Petit Scholar Mentor

- Awarded Petit Scholarship to mentor three undergraduate students in the field of Healthcare and Medical Robotics.
- For each undergraduate project, the students were required to visit collaborating surgeons, and completely understand the surgical procedure. Assisted the students in identifying a research topic, analyzing it thoroughly, designing phantom models and handheld controllers for a robotic surgical tool.
- Mentored students published their research in prestigious robotics publications like T-RO and IROS.
- Secured $7500 travel and research grants for mentorship.

Industry Experience

Lutron Electronics 07/2013 - 06/2014

Senior Project Electrical Engineer

- Designed embedded software for the implementation of the Lutron proprietary wireless communication protocol in the mass market wireless home automation solutions.

Controls and Powertrain Research Group, Ford Motor Company 06/2012 - 08/2012

Summer Intern

- Implemented the 'Vector Reference Governor' predictive control scheme on the linearized models of the Ford Motor Company engines. Also implemented the non-linear version of the reference governor algorithm on the Ford vehicles.

Leadership Experience

- **Co-organized three workshops** at the 2019-2020 IEEE International Symposium on Medical Robotics.

  (ISMR 2020 workshops delayed due to COVID)
- Demonstrated robots and led lab tours for K-12 students and guests at Georgia Tech National Robotics Week (2017-19).
- 2015 - FIRST LEGO robotics league judge.
- **Peer Reviewer:** Serving as a reviewer for a number of conferences and journals, including: Science Robotics, IEEE Transactions on Robotics (T-RO), IEEE Robotics and Automaton Letters (RA-L), IEEE/RSJ International Conference on Intelligent Robots and Systems (IROS), IEEE International Conference on Robotics and Automation (ICRA), IEEE International Symposium on Medical Robotics (ISMR), American Control Conference (ACC).

Invited Talks

- **ICRA 2019** - Workshop on 'Open Challenges and State-of-the-Art in Control System Design and Technology Development for Surgical Robotic Systems'. 05/2019
- **Intuitive Surgical Research** - Seminar on "Design, Modeling and Control of Micro-scale Surgical Robotics". 06/2020
- **Siemens Healthineers** - "Design, Modeling and Control of Micro-scale and Meso-scale Continuum Robots". 06/2020

Awards and Honors

- Gordon Research Seminar (GRS) 2022 on Robotics - Speaker 04/2021
- RSS Pioneer 06/2021

References

Reference 1*: Dr. Jaydev P. Desai

Ph.D. Advisor

- Professor, Wallace H. Coulter Department of Biomedical Engineering, Georgia Institute of Technology
- Director, Georgia Center for Medical Robotics
- Associated Director, Institute for Robotics and Intelligent Machines
- Tel: (Office) +1-404-385-5381
- Email: jaydev@gatech.edu

Reference 2: Dr. Joshua J. Chern, MD, Ph.D.

Clinician Collaborator and Ph.D. Committee Member

- Adjunct Clinical Faculty, Emory University Department of Neurosurgery
- Pediatric Neurosurgeon, Children's Healthcare of Atlanta
- Tel: (Personal) +1-678-641-3449
- Email: Joshua.Chern@choa.org

Reference 3: Dr. Thomas R. Kurfess

Professor and Supervisor to Head TAs, ME2110

- Professor and HUSCO/Ramirez Distinguished Chair in Fluid Power and Motion Control, Georgia Institute of Technology
- Chief Manufacturing Officer for Oak Ridge National Laboratory (ORNL)
- Tel: (Office) +1-404-385-0959
- Email: kurfess@gatech.edu

Reference 4: Dr. Zachary L. Bercu, MD, RVPI

Clinician Collaborator and Ph.D. Committee Member

- Assistant Professor, Department of Radiology and Imaging Sciences, Emory University School of Medicine
- Assistant Program Director for Interventional Radiology Residency and Fellowship Program, Emory University School of Medicine
- Clinical Site Director, Interventional Radiology, Emory University Hospital Midtown
- Tel: (Personal) +1-646-833-8194
- Email: zachary.louis.bercu@emory.edu

Reference 5: Dr. Frank L. Hammond III

Ph.D. Committee Member

- Assistant Professor, George W. Woodruff School of Mechanical Engineering, Georgia Institute of Technology
- Tel: (Office) +1-404-385-4208
- Email: frank.hammond@me.gatech.edu

Reference 6: Dr. Ellen Yi Chen Mazumdar

Ph.D. Committee Member

- Assistant Professor, George W. Woodruff School of Mechanical Engineering, Georgia Institute of Technology
- Tel: (Office) +1-404-894-3242
- Email: ellen.mazumdar@me.gatech.edu

Reference 7: Dr. Christopher J. Saldana

Professor and Supervisor to Head TAs, ME2110

- Associate Professor, George W. Woodruff School of Mechanical Engineering, Georgia Institute of Technology
- Tel: (Office) +1-404-385-3735
- Email: christopher.saldana@me.gatech.edu

Robotic Guidewires

Publications: ICRA 2018, RA-L 2020, ISMR 2020 (Three patents pending)

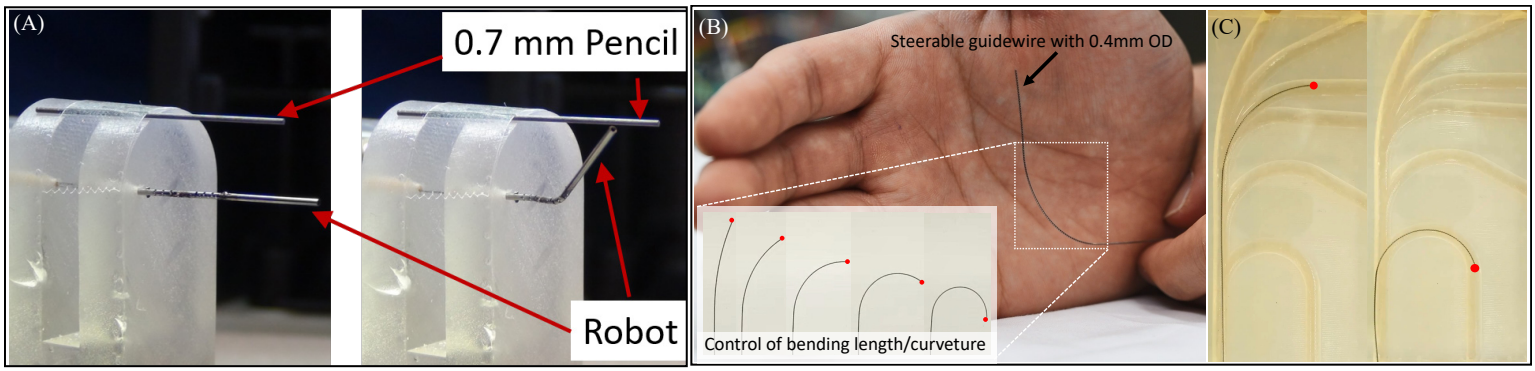

Figure 1: (A) 2-DoF robotic guidewire, 0.78 mm in Outer Diameter; (B) COAST robotic guidewire, 0.4 mm in Outer Diameter, with Follow-the-leader (FTL) capability; (C) The robotic guidewire can execute FTL motion at high curvatures.

2-DoF Guidewire: In this project, we have designed and analyzed a **0.78 mm two degree-of-freedom robotic guidewire** for cardiovascular applications. The guidewire is designed using femtosecond laser micromachining in a nitinol tube to create 'notch joints' allowing the tube to bend in the plane of the joint with the application of bending moment from a tendon. Internal routing of the tendon allows us to achieve 2-DoF bending of the guidewire, due to two orthogonal joints (see Fig. 1(A)).

COAST Guidewire (Video Link): The CO-axially Aligned STeerable (COAST) guidewire is the newest version of our robotically steerable guidewire with an **outer diameter of 0.4 mm**. The guidewire has a single degree-of-freedom and demonstrates follow-the-leader (FTL) motion along with feed-forward motion (see Fig. 1(B)). The guidewire is able to achieve high curvatures at varying bending lengths. Therefore the guidewire can be used in minimally invasive surgical procedures involving pediatric carotid arteries, aortic bifurcations or aortic arches (see Fig. 1(C)).

Robotic Neuroendoscope

Publications: ISER 2018, IROS 2019, TMECH 2020, TRO 2020 (Two patents pending)

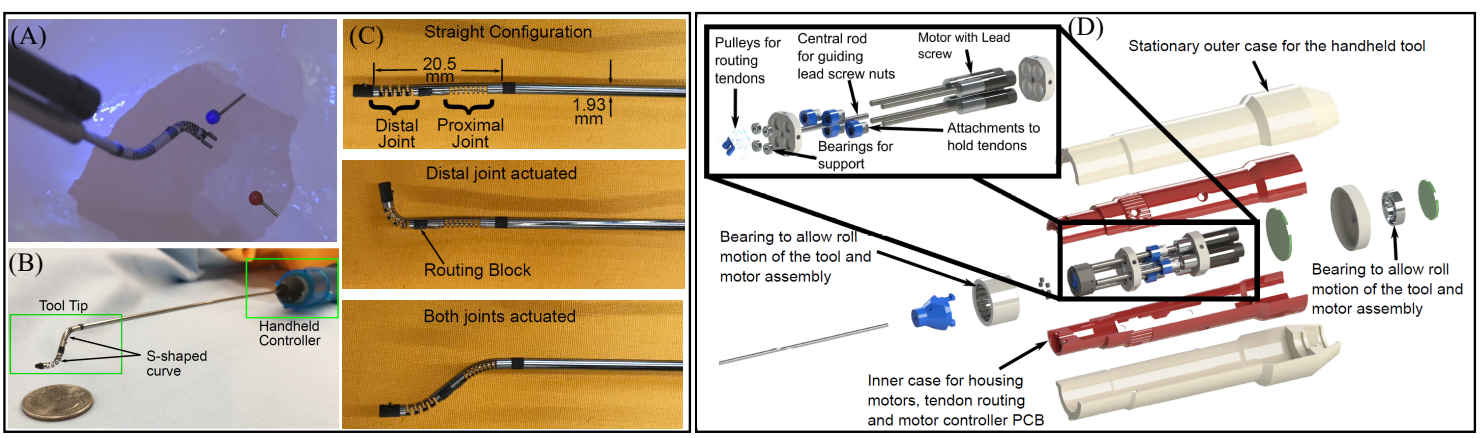

Figure 2: (A) Robotic neuroendoscope electrocauterizing sites in a phantom ventricular cavity; (B) Tool body with handheld controller; (C) Dimensions and modes of actuation of neuroendoscope tool tip; (D) CAD model of handheld controller.

The robotic pediatric neuroendoscope is a tendon-driven robotic electrocautery tool (see Fig. 2(A)) with a handheld controller (see Fig. 2(B)) designed for minimally invasive surgeries for treating pediatric hydrocephalus. The tool itself is a cylindrical tube of 1.93 mm (outer diameter) with two notch joints micromachined within it using a femtosecond laser. Both joints of the robotic tool are in the same plane, allowing the robot to make S-shaped curves in this bending plane (see Fig. 2(C)). The plane of bending can further be changed by a rolling motion capability in the handheld controller (see Fig. 2(D)). The handheld controller is very ergonomic (OD: 3 cm) and compatible with existing neuroendoscope trocars. The tool-tip is controlled using a joystick located at the back end of the handheld controller.

Large Deflection Shape Sensing for Micro/Meso-scale Continuum Robots

Publications: IEEE Robotics and Automation Letters 2020

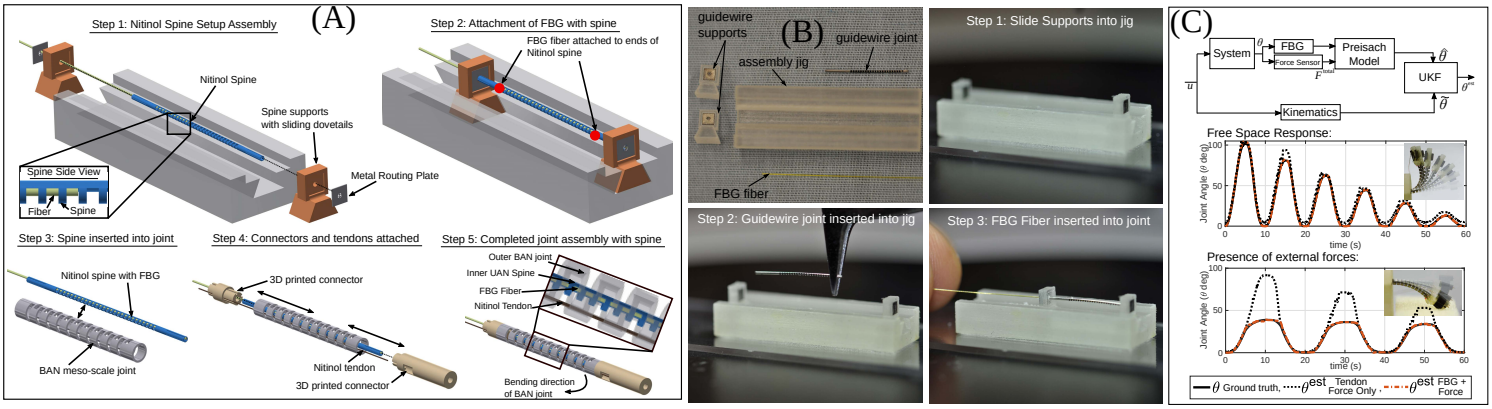

Figure 3: Fiber Bragg grating based sensing assembly to sense shape of micro/meso-scale continuum robots: (A) Design of proposed sensing assembly in meso-scale robot; (B) Design of proposed sensing assembly in micro-scale robot; (C) Preisach model for hysteresis with unscented Kalman filter demonstrates excellent tracking in free-space and external forces.

Large deflection shape-sensing for micro-scale and meso-scale robots is a challenging problem due to the size constraints of these robots. We attacked this problem by developing a shape-sensor designed by mounting an FBG fiber within a micromachined nitinol tube. The neutral axis of this tube is shifted due to the machining (see Fig. 3(A)-(B)). This shifting of the neutral axis allows the FBG core to experience compressive strain when the tube bends, which we can measure. By controlling the neutral axis location of the tube, we can modulate the sensitivity of the sensor very precisely. This sensor can measure curvatures as high as **145 m^{-1} (which is over two times previously reported curvatures)**, and can estimate shape even in the presence of external forces or kinematic uncertainties (see Fig. 3(C)) (Video Link).

Miniature Force Sensor for Tendon/Cable Driven Systems

Publications: IEEE Sensors Journal 2020

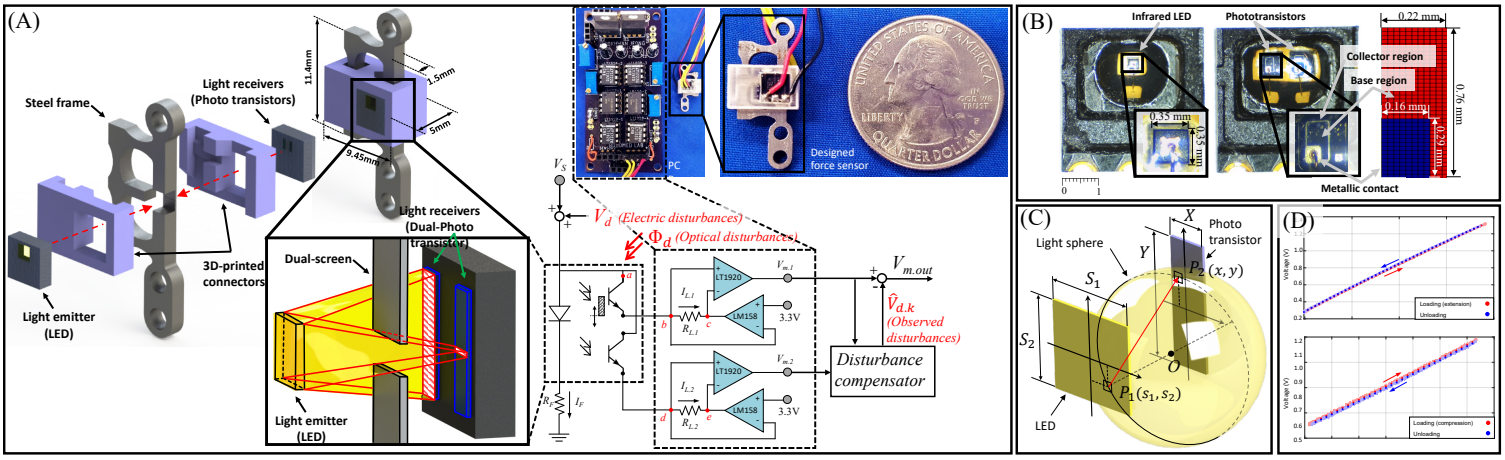

Figure 4: Photo-interrupter based miniature force sensor for cable/tendon-driven robots or prosthesis: (A) Design, electronic circuit, disturbance observer, and working principle of the proposed force sensor; (B) Microscopic image of the photo-interrupter; (C) Lambertian distribution optic model; (D) Output of the sensor with high linearity and low hysteresis.

Sensing the cable tension is critical for cable driven robots/prosthesis. Most force sensors are either too bulky or have a narrow linear range, and are vulnerable to external disturbances. This makes it difficult to use these sensors in precision force measurement and feedback control, especially in handheld medical robotics or compact prosthesis/exoskeletons. This work presents a photointerrupter (LED + phototransistor) based force sensing mechanism to implement a low-cost, high accuracy, and reliable sensor with a miniaturized design. The geometry of the sensor is optimized and a novel dual-screen arrangement is used to increase the linear range of the sensor output. A dual-phototransistor signal acquisition is introduced to compensate the external disturbances and provide robust sensor output. The sensor has the ability to measure **forces up to 21 N, having 1.08% nonlinearity, 0.83% hysteresis, and 99.58% accuracy**.